QLA-360FER-20

AUTO ACQUISITION ANTENNA POSITIONER FOR MICROWAVE LINE OF SIGHT

The QLA-360FER-20 is a Power Over Ethernet (PoE) antenna positioner designed from the ground up to automatically point and peak directional antennas for microwave line of sight communications.

The built in GPS and digital compass with full featured web based user interface provides rapid and accurate antenna pointing. The user interface includes a stored locations database that allows easy recall of known target locations followed by a final auto peak using radio signal strength.

The QLA-360FER-20 is typically paired with 2-3 ft antennas, payloads up to 70 lbs (31.8 kg), and offers 360° of azimuth & +120°/-20° of elevation range. Download the Interface Control Drawing (ICD) for more details.

Optional tri-pods, table top mount, radio adapter brackets, antenna adapter brackets, polarization rotators, joysticks, and transit cases are also available.

TECHNICAL SPECIFICATIONS - QLA-360FER-20	
Power	Power Over Ethernet (POE) 48VDC-56VDC Supply Included
Material / Finish	Aluminum with stainless steel hardware / Hard coat anodize
Positioner Travel	
Azimuth	400° (+/-200°)
Elevation	140° (+120°/-20°)
Positioner Drive Rate	
Azimuth	Variable, up to 2.2°/sec no load
Elevation	Variable, up to 2.2°/sec no load
Temperature	
Operational	-22 to 140°F (-30 to 60°C)
Survival	-40 to 158°F (-40 to 70°C)
Feedback Resolution	0.1°
Backlash (Az / El)	less than 0.15° in both axes
Torque	
Operational (both axes)	60 ft-lbs (81.3 Nm)
Survival (both axes)	200 ft-lbs (271.2 Nm)
Payload	70 lbs (31.8 kg)
Dimensions	Height: 13.08" (33.2 cm), Width: 8.59" (21.8 cm), Depth: 12.38" (31.4 cm)
Weight	23.5 lbs (10.7 kg)
Mounting Interface	Clamps standard to a 2" dia mast (5 cm). Optional table top mount available
Antenna Mount Options	1/4-20 thumb nuts (tool-less) and 5/16 clearance holes (See ICD for details)
Communication Interface	
User Interfaces	Web based hosted internal to unit, Pelco D
Ethernet	10/100 Ethernet
Serial	RS-485

REV C

Specifications subject to change without notice

Q-PAR Antennas USA, LLC – sales@qparusa.com – Tel: 702-208-9973 – Fax: 702-208-9984

REV	DESCRIPTION	DATE	APPROVED
B	CN600564	2018-08-02	CLC

NOTES: UNLESS OTHERWISE SPECIFIED

1. QLA-360FER-20 CONFIGURABLE OPTIONS PER TABLE I. PART NUMBER LA-360FER-20-100 SHOWN THROUGHOUT THIS DRAWING. PoE CABLE SHOWN NOT TO SCALE
2. USE INTERFACE CONTROL DRAWING IN CONJUNCTION WITH DATASHEET AS DENOTED IN TABLE II
3. 48 - 56VDC POWER SUPPLY INCLUDED WITH POSITIONER. NOT SHOWN IN DRAWING
4. HARD COAT ANODIZE ALUMINUM CONSTRUCTION WITH STAINLESS STEEL HARDWARE
5. 400° (+/-200°) AZIMUTH TRAVEL WITH 2.2°/SEC DRIVE RATE (NO LOAD)
6. 140° (+120°/-20°) ELEVATION TRAVEL WITH 2.2°/SEC DRIVE RATE (NO LOAD)
7. -22° TO 140°F (-30° TO 60°C) OPERATIONAL TEMPERATURE RANGE. -40 TO 158°F (-40 TO 70°C) NON-OPERATIONAL TEMPERATURE RANGE
8. 0.1° FEEDBACK RESOLUTION IN ALL AXES
9. AZIMUTH AND ELEVATION BACKLASH LESS THAN 0.15°
10. 13.08" (33.2 cm) HIGH X 8.59" (21.8 cm) WIDE X 12.38" (31.4 cm) DEEP. DIMENSIONS APPLY WHEN POSITIONER IS AT 0° AZIMUTH AND 0° ELEVATION ANGLES
11. WEIGHT APPROXIMATELY 23.5 LBS (10.7 kg) NOT INCLUDING PoE CABLE
12. PAYLOAD SHALL NOT EXCEED 70 LBS OR 60 FT-LBS OF TORQUE ABOUT THE ELEVATION AXIS. TO CALCULATE TORQUE, TAKE THE DISTANCE FROM THE PAYLOAD CENTER OF GRAVITY TO DATUM -H- IN FEET AND MULTIPLY BY THE PAYLOAD WEIGHT. SEVERAL ANTENNA BRACKET OPTIONS AVAILABLE THAT INTERFACE DIRECTLY WITH FEATURES SHOWN. GO TO www.qparusa.com TO LEARN MORE
13. RADIO OR AUXILIARY MOUNTING HOLES (BOTH SIDES). 30 LBS MAX. IF MOUNTED TO THE ELEVATION BRACKET, TOTAL PAYLOAD (INCLUDING ANTENNA) MUST NOT EXCEED 60 FT-LBS
14. CENTER OF GRAVITY 0.1" (0.25 cm) IN THE X-DIRECTION, 6.6" (16.8 cm) IN THE Y-DIRECTION AND 0.6" (1.5 cm) IN THE Z-DIRECTION. X & Z MEASURED FROM THE CENTER OF THE 2.00" DIAMETER MOUNTING POLE
15. FOR PERMANENT INSTALLATIONS, IT IS RECOMMENDED THAT THE (2) INDICATED 5/16-18 THREADED KNOBS BE REPLACED WITH (2) 5/16-18 X 1.000" LONG STAINLESS STEEL HEX HEAD FASTENERS. HARDWARE PROVIDED WITH UNIT. TORQUE TO 132 IN-LBS
16. POSITIONER IS AT AZIMUTH PEDESTAL 0° WHEN INDICATED FASTENER IS AT POSITION SHOWN WITH CLAMPING KNOBS IN THE BACK AS SHOWN
17. POSITIONER CLAMPS TO STANDARD 2" OUTSIDE DIAMETER MAST (NOT INCLUDED). OPTIONAL MIDMOUNT KIT AVAILABLE TO ADAPT TO MAST DIAMETERS UP TO 6". GO TO www.qparusa.com TO LEARN MORE
18. 5/16" QUICK RELEASE PIN TO SECURE POSITIONER TO MAST AND PREVENT ROTATION

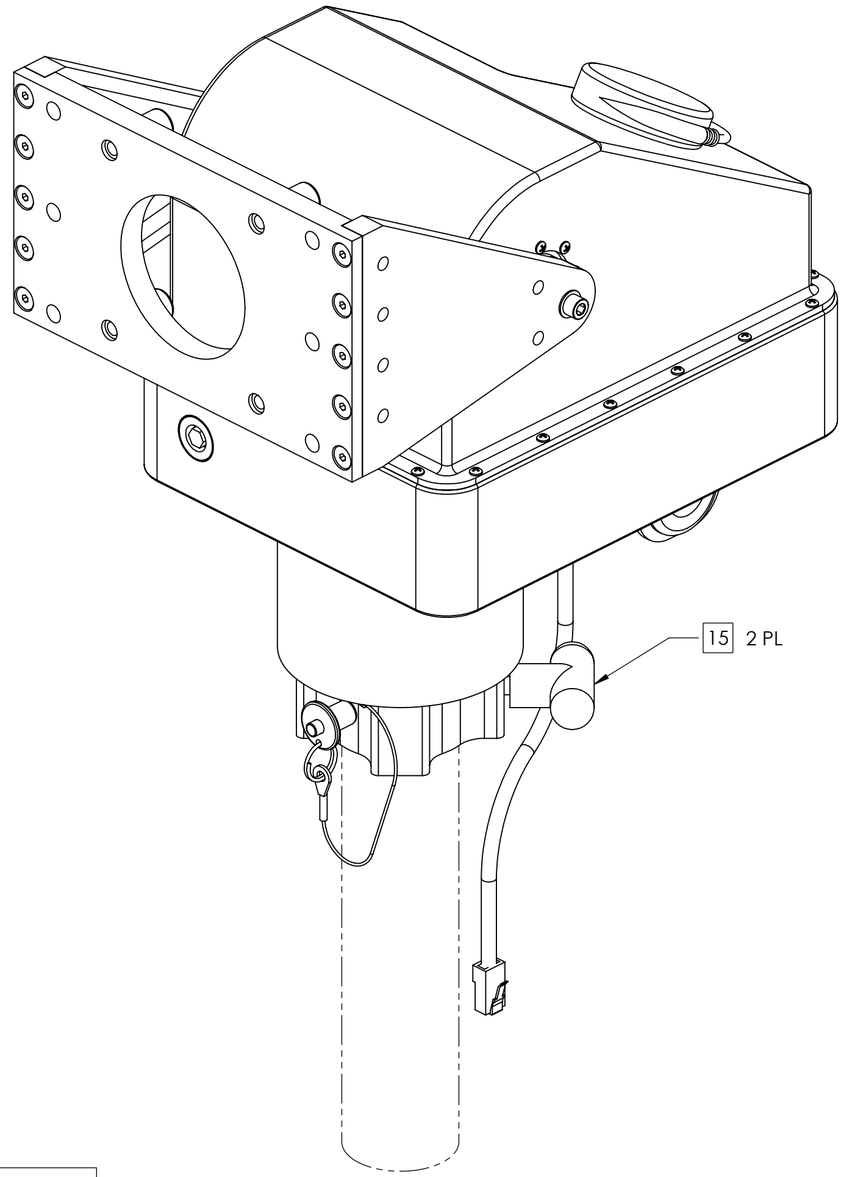

TABLE I

BUILDING A PART NUMBER ***STANDARD OPTIONS***

LA-360FER - 20 - ____ - 100 **<<EXAMPLE**

SHIELDED ETHERNET CABLE STANDARD LENGTHS

050 = 50 ft
100 = 100 ft
150 = 150 ft
200 = 200 ft
250 = 250 ft
300 = 300 ft
XXX = Custom length in feet
XXXC = Add "C" to end of cable length for unterminated mating connector

CUSTOM CONFIGURATION

= Standard options - leave blank

MOTOR DRIVES AND PAYLOAD

20 = Az 60 ft-lbs @ 2.2°/s, El 60 ft-lbs @ 2.2°/s, 70 lb payload. Typically paired with 2-3 ft antenna
21 = Az 30 ft-lbs @ 13°/s, El 60 ft-lbs @ 2.2°/s, 70 lb payload. Typically paired with 2-3 ft antenna

MODEL

LA-360FER = LinkAlign-360FER (+/-200° azimuth, +120/-20° elevation)

TABLE II

PART NUMBER	DATASHEET NUMBER
LA-360FER-20	N500120
LA-360FER-21	N500149

SYMBOL KEY

NOTE PL ITEMS

PROPRIETARY AND CONFIDENTIAL
THE INFORMATION CONTAINED IN THIS DRAWING IS THE SOLE PROPERTY OF QPARUSA TECHNOLOGIES. ANY REPRODUCTION IN PART OR AS A WHOLE WITHOUT THE WRITTEN PERMISSION OF QPARUSA TECHNOLOGIES IS PROHIBITED.

Q-PAR Antennas USA, LLC
Las Vegas, NV 89121
www.qparusa.com

UNLESS OTHERWISE SPECIFIED:

DIMENSIONS ARE IN INCHES
TOLERANCES:
ANGLE ± .5 DEGREES
TWO PLACE DECIMAL ±.030
THREE PLACE DECIMAL ±.010

INTERPRET DIM AND TOL PER ASME Y14.5M - 1994

THIRD ANGLE PROJECTION

DO NOT SCALE DRAWING

DRAWN	S. CHEYNE	2015-10-15
CHECKED	C. CHEYNE	2018-08-02
ME APPR.	S. CHEYNE	2015-10-15
EE APPR.		

PART NO.
SEE TABLE I

Q-PAR Antennas USA, LLC

TITLE:
QLA-360FER-20
INTERFACE CONTROL
DRAWING

SIZE	DWG. NO.	REV
C	ICDN900346	B

SCALE: 1:2 SHEET 1 OF 4

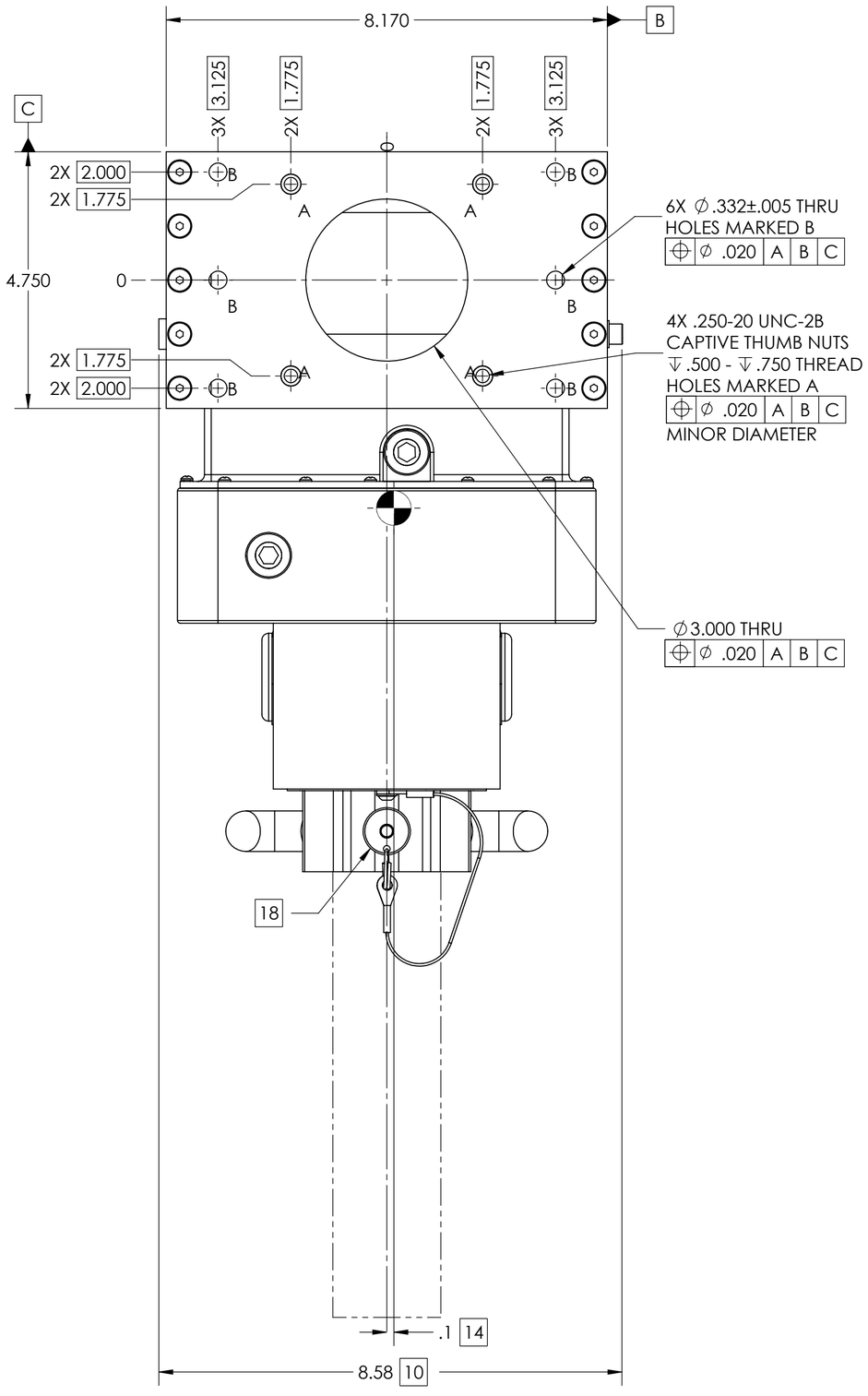

ANTENNA MOUNTING FEATURES

12

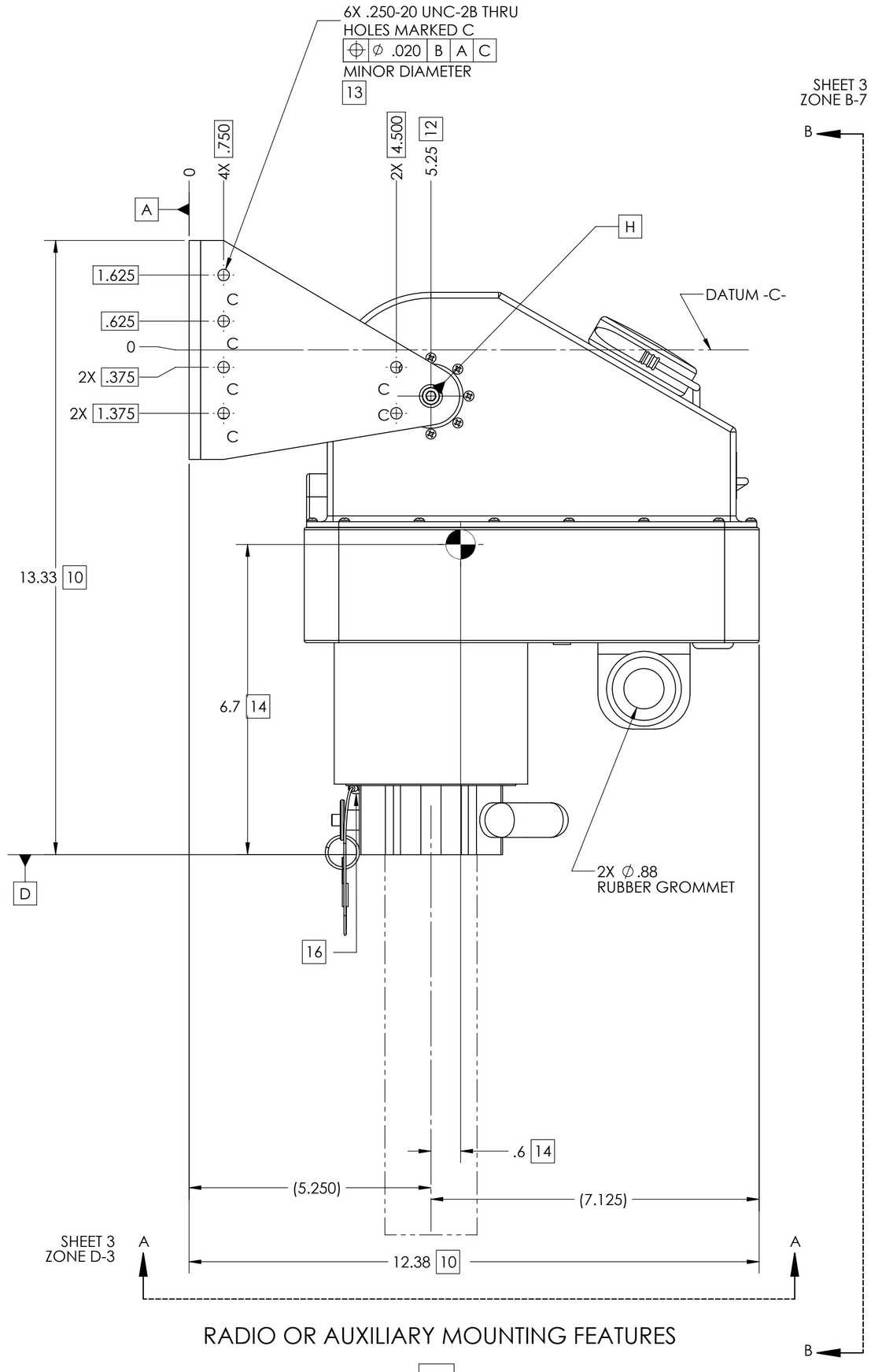

RADIO OR AUXILIARY MOUNTING FEATURES

13

SIZE	DWG. NO.
C	ICDN900346
SCALE: 1:2	SHEET 2 OF 4

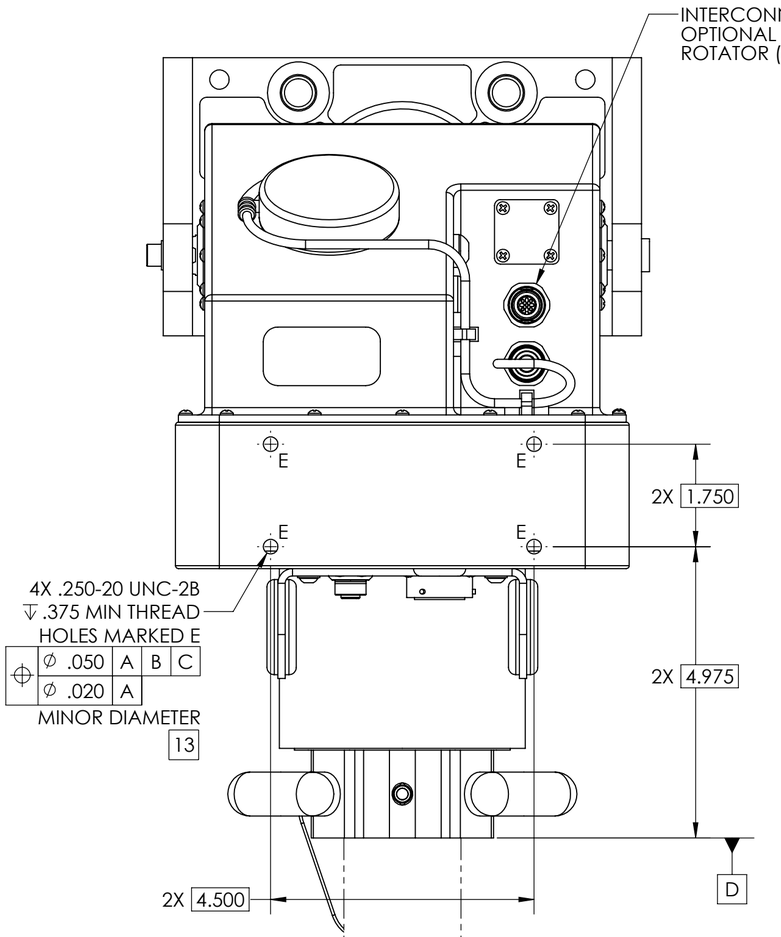

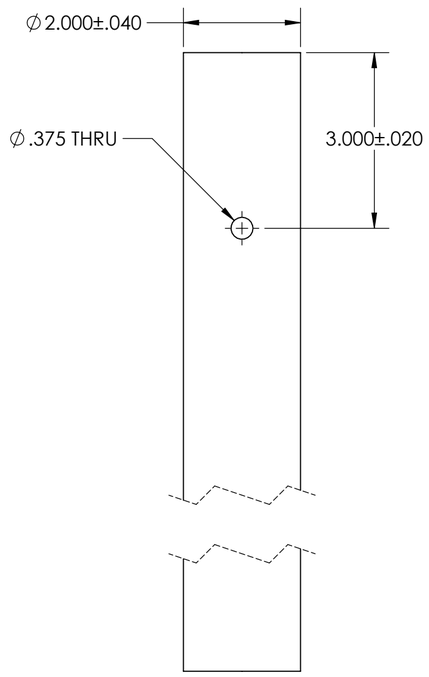

SUGGESTED POSITIONER
MAST DIMENSIONS

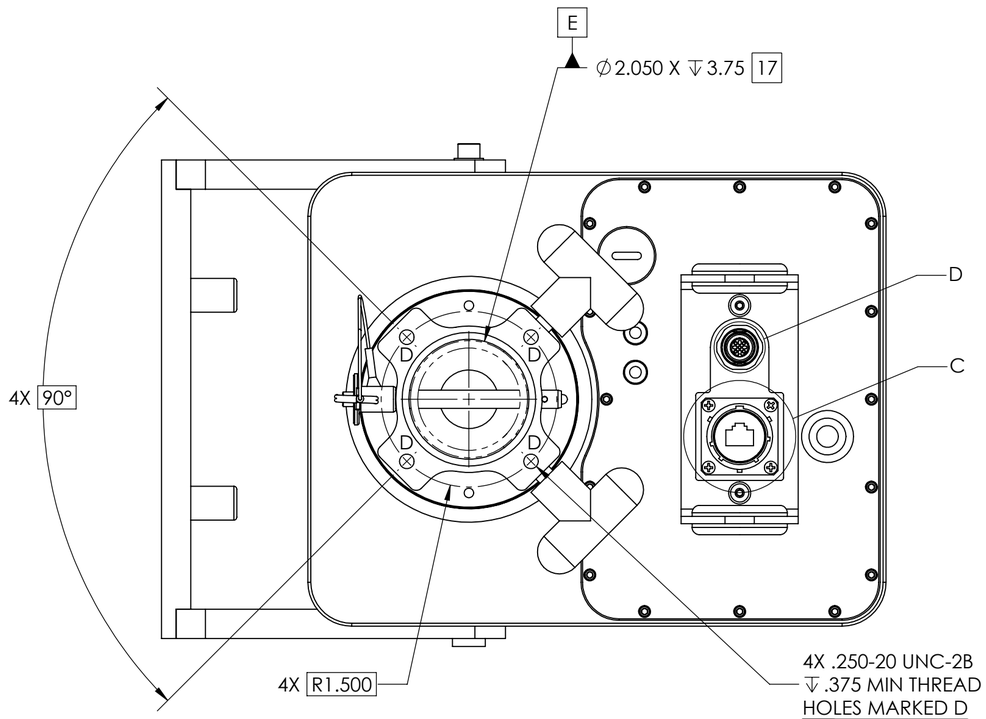

SECTION A-A
SHEET 2
ZONE A-3

17

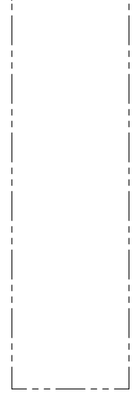

SECTION B-B
SHEET 2
ZONE F-1

INTERCONNECT FOR POSITIONER PoE

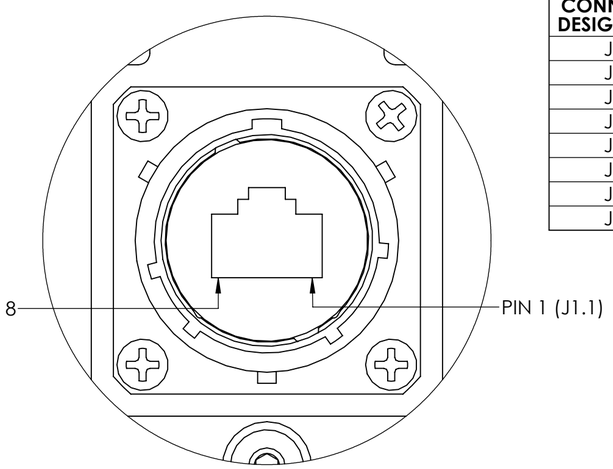

J1 CONNECTOR SHOWN FROM MATING SIDE
MATES WITH AMPHENOL P/N - RJF6B

DETAIL C
SCALE 2 : 1
SEE TABLE II FOR PINOUT DETAILS

TABLE II (PoE CONNECTOR)	
CONNECTOR DESIGNATION	**FUNCTION**
J1.1	DATA PAIR 1
J1.2	DATA PAIR 1
J1.3	DATA PAIR 2
J1.4	+48-56VDC PoE POWER INPUT
J1.5	+48-56VDC PoE POWER INPUT
J1.6	DATA PAIR 2
J1.7	DC RETURN FOR PoE INPUT
J1.8	DC RETURN FOR PoE INPUT

INTERCONNECT FOR SERIAL INTERFACE

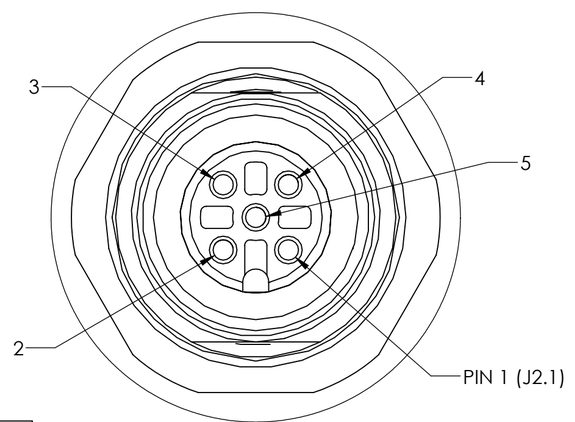

J2 CONNECTOR SHOWN FROM MATING SIDE
MATES WITH TURCK P/N - 8151-0/PG9

DETAIL D
SCALE 4 : 1
SEE TABLE III FOR PINOUT DETAILS

TABLE III (SERIAL CONNECTOR)	
CONNECTOR DESIGNATION	**FUNCTION**
J2.1	DC RETURN FOR QPARUSA JOYSTICK
J2.2	NOT USED
J2.3	(B) TxD-/RxD- DATA LINE
J2.4	(A) TxD+/RxD+ DATA LINE
J2.5	DC POWER FOR QPARUSA JOYSTICK

SIZE	DWG. NO.
C	ICDN900346
SCALE: 1:2	SHEET 3 OF 4

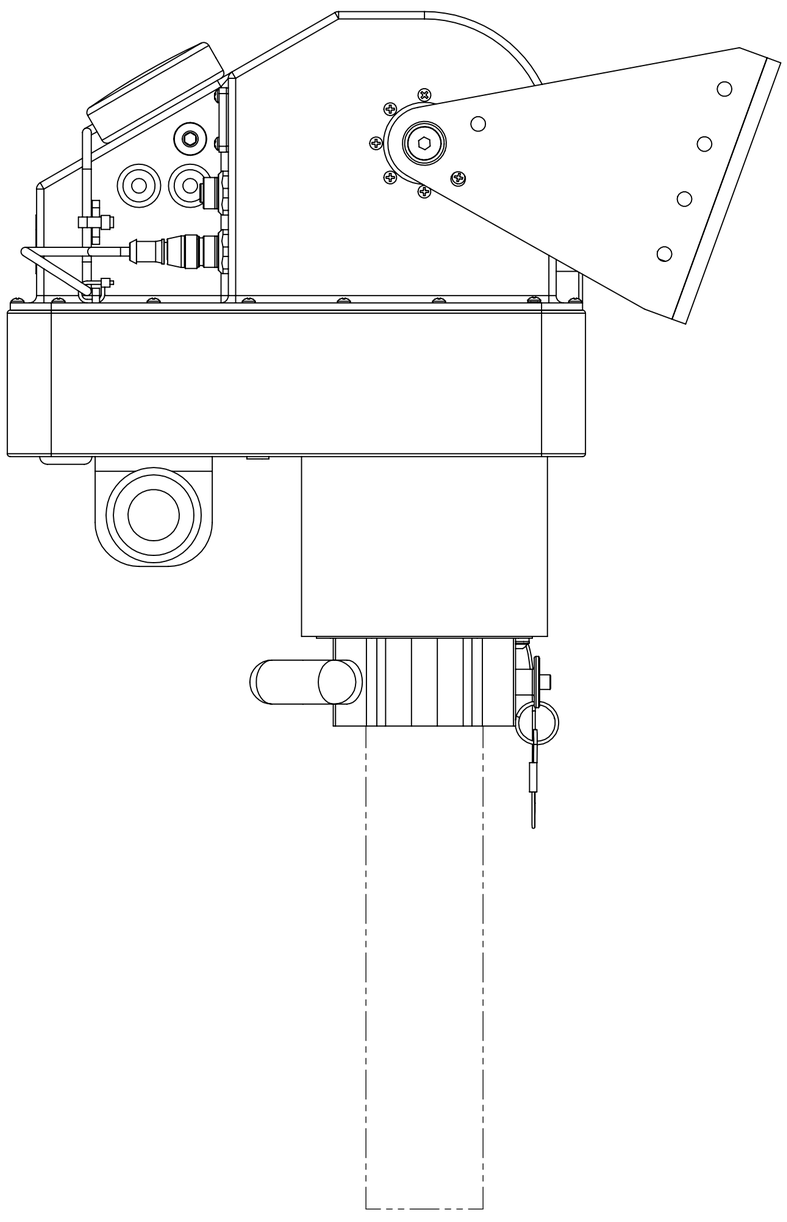

SHOWN AT -20° ELEVATION LIMIT

6

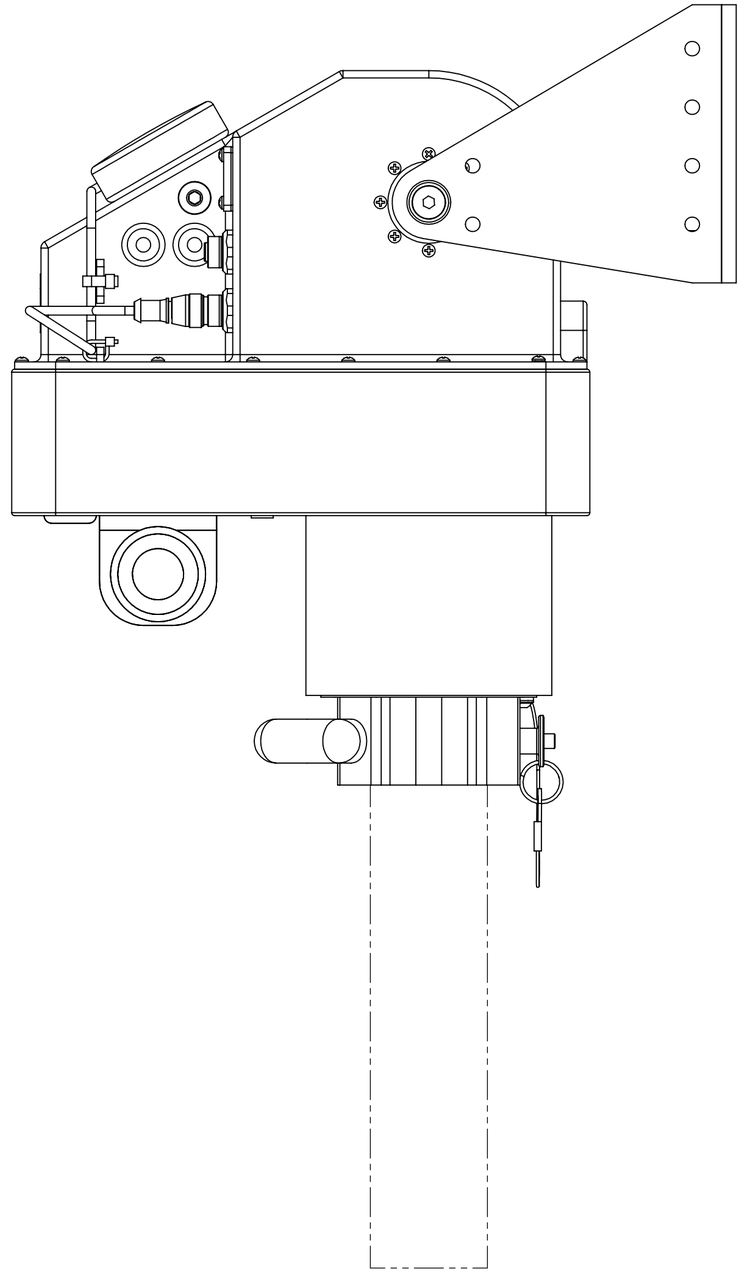

SHOWN AT 0° ELEVATION

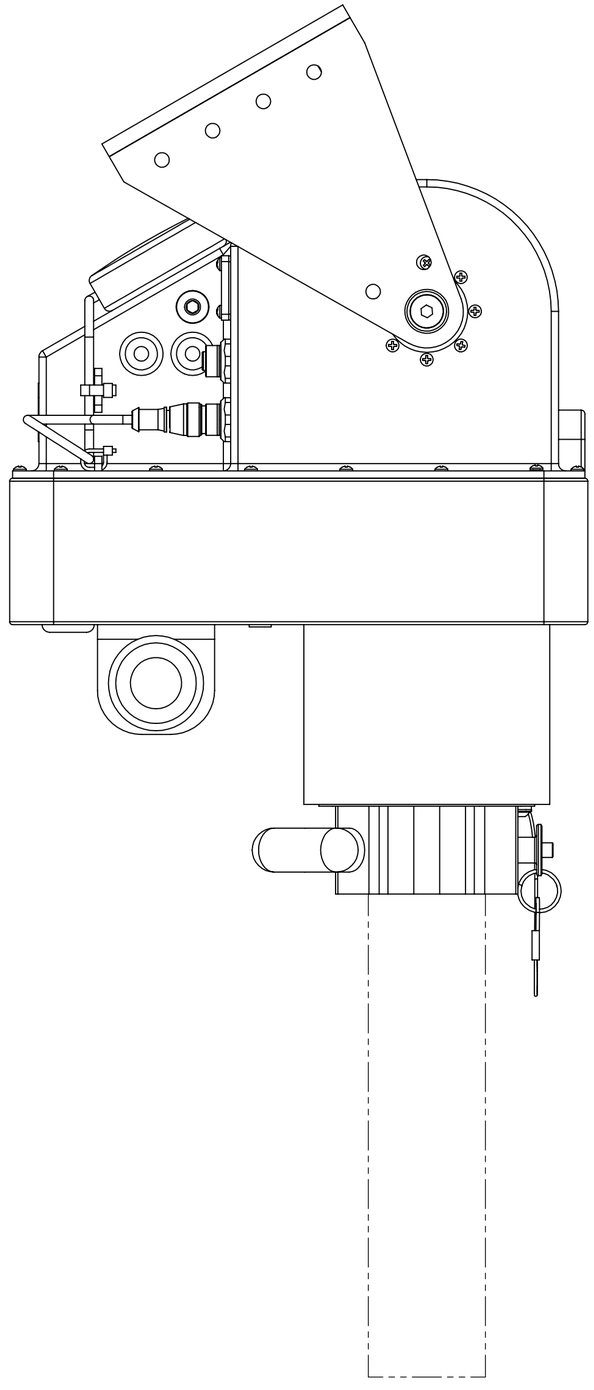

SHOWN AT 120° ELEVATION LIMIT

6

SIZE	DWG. NO.
C	ICDN900346
SCALE: 1:2	SHEET 4 OF 4